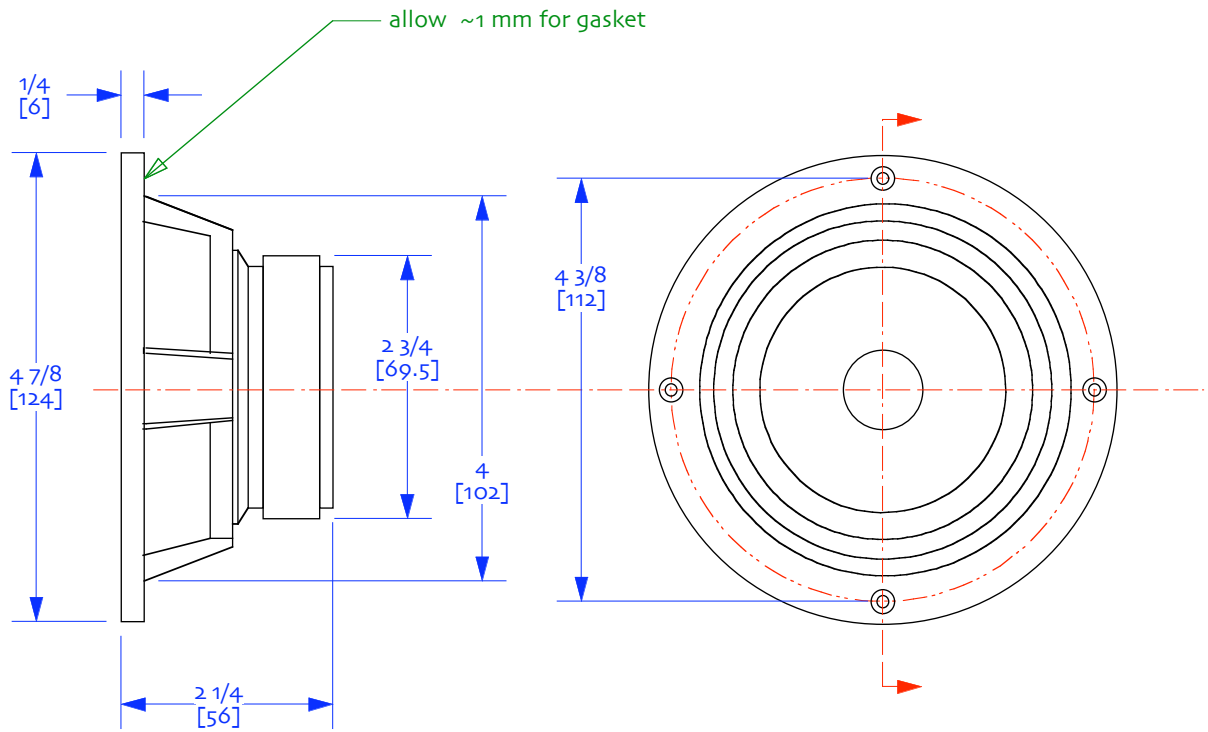

markaudio

CHR-70.3
CHP-70.2
CHBW-70
driver dimensions
drawn by dld | 24june-2011