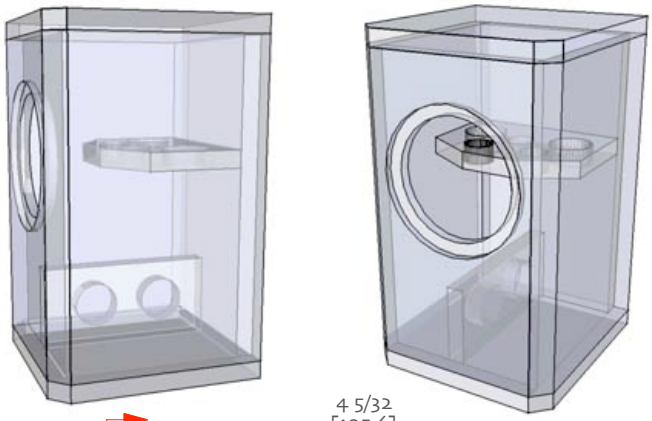

CHR-70 | mMarS 1v0

23 - oct -2009 | designed & drawn by D Dlugos
for non-commercial use only

Notes:

0/ made with 15 mm (5/8")baltic birch plywood

1/ line with wool felt, cotton felt, or fiberglass or lightly fill with polyfluff or teased wool

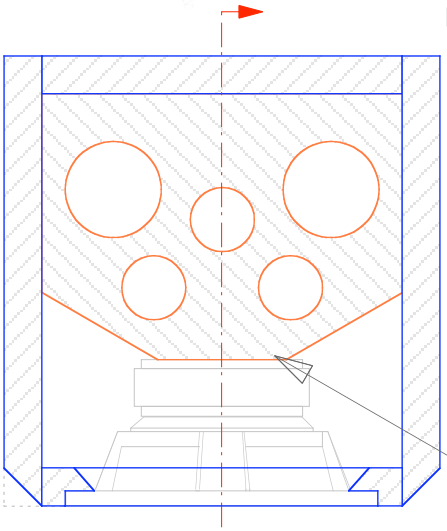

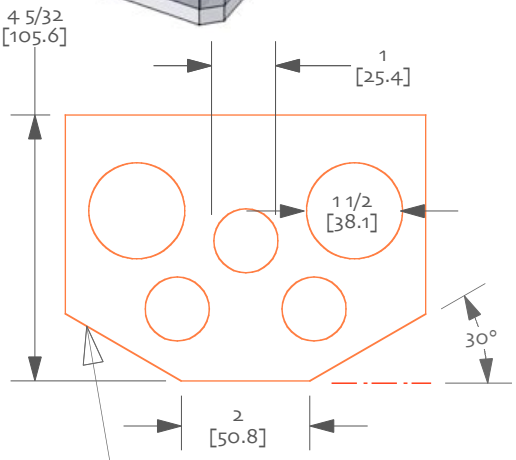

The fit of the brace should be determined in the field... the brace should be tight against the magnet of the driver, but not so much that it stresses the basket... small paper shims can be used if necessary.