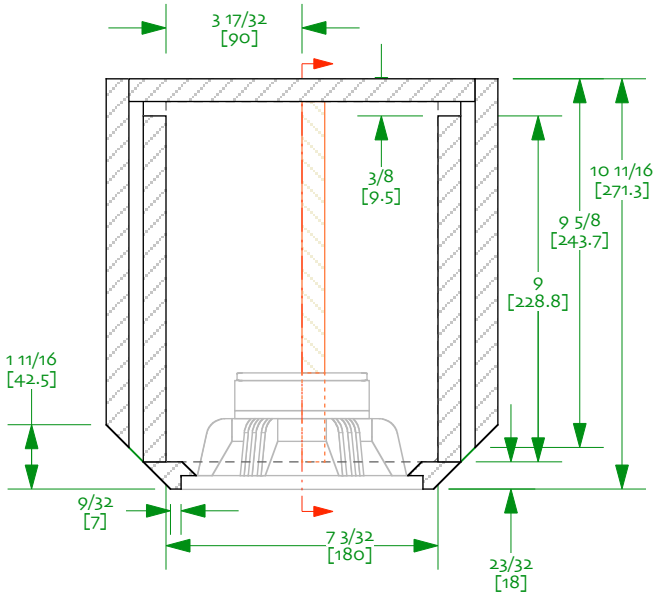

Notes:

0/ designed for Mark Audio Alpair 10

1/ target volume 14 liters = xxx in^3

2/ All panels 15mm (19/32") thick. Baffle is 18mm --- or adjust for 2x12mm.

3/ Ports are ~ 55mm (2 13/64") long by 9.5mm (3/8") thick - 3 per side with 2 - 57.5mm (2 1/4") + 2 - 30mm (1 3/16") solid spacers (spacers run all the way to the back of the box)

4/ brace shape is only suggestive -- prime purpose is to brace speaker, it needs to be about 35-40% holes. Leave a solid piece from the back of the driver to the back of the box(ie if you have to mount a terminal cup in the middle, you'll want to make sure the brace allows clearance)

5/ Don't forget to angle cut the back of the driver cut-out to give it breathing room

6/ All internal panels lined with ~1/2" (12mm) wool felt (preferred), 3/4" (19mm) poly-fluff batting, or 1" (25mm) fiberglass Note that it is hard to get into the box after it is sealed up

planet_10 hi-fi

Alpair 10 Mar-Ken10 1v01
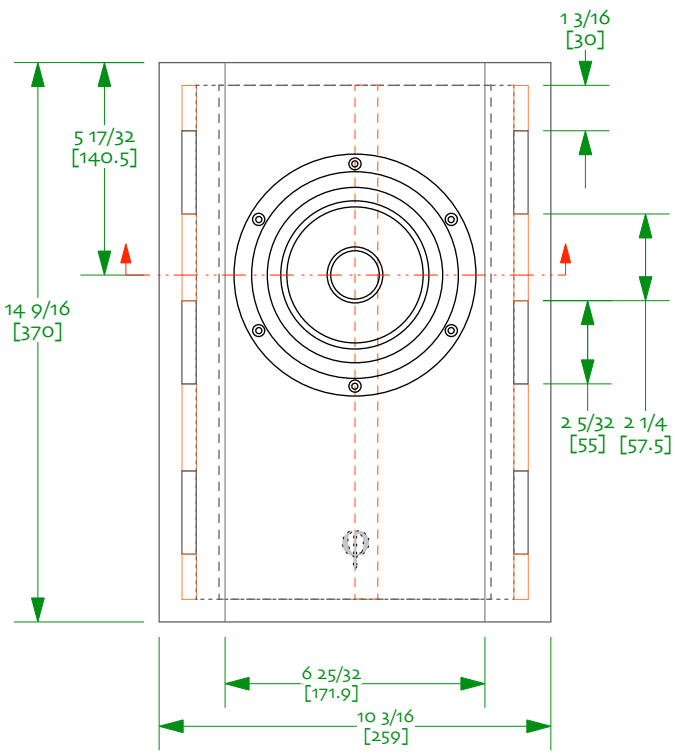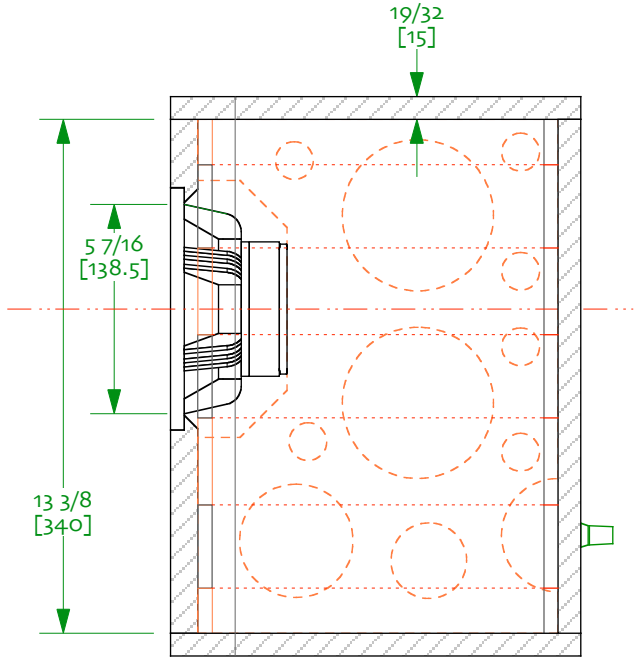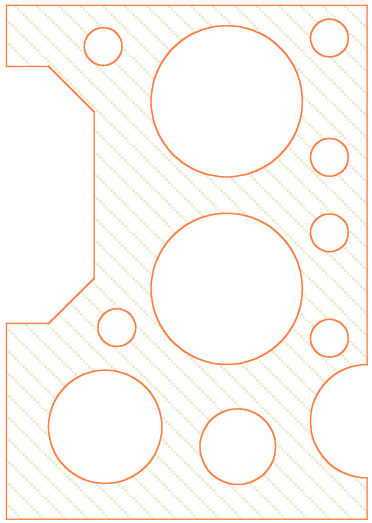
© 2009, 2010 planet_10 enterprises limited
20- may-2009 | updared 09-august-2010
designed & drawn by dld
free for non-commercial use only